Data Sheet

Article number: 140571248
Description: KLEE Fork joint G 12x48 M12, left

Measures

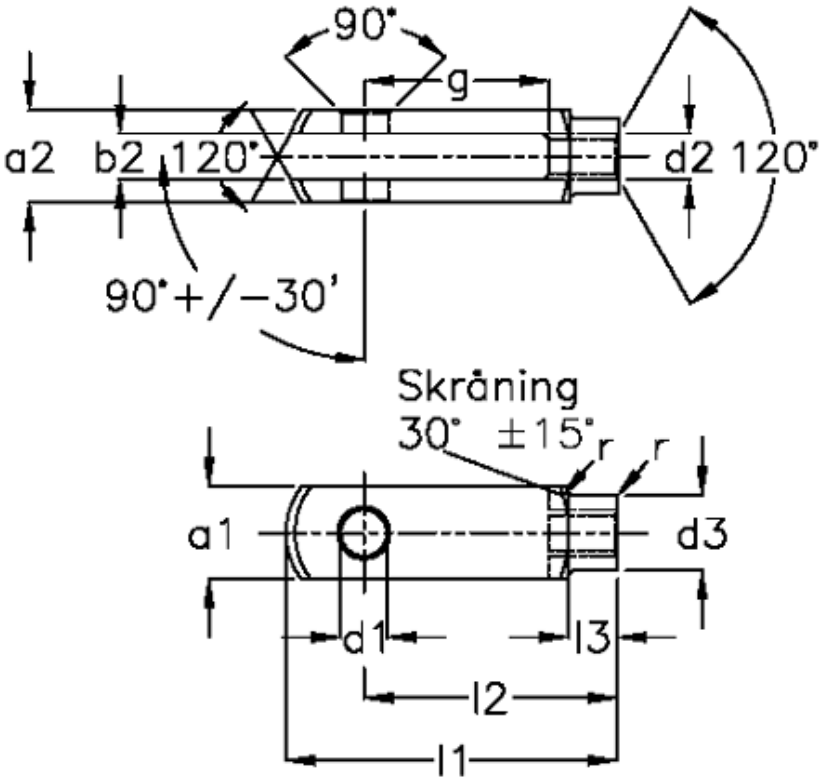

a1 (h11)	= 24	g (+/-0.5)	= 48
a2	= 24 (+0,3 -0,16)	l1 (+/-0.5)	= 86
b1 (B13)	= 12	l2	= 72 (-0,4)
b2	= 12 (+0,7 +0,15)	l3	= 18 (+/-0,2
d1 H9	= 12	r	= 0.5
d2	= M 12 x 1,75	Size	= G 12 x 48
d3 (+/-0.3)	= 20	Weight	= 0.175
f (+/-0.2)	= 0.5		

Product drawings and brochures of any kind may contain errors for which Brd. Klee A/S cannot be liable.